UFAS Accessibility Compliance
Unit 1D
Unit 1E

Applicable Accessibility Code & Standard*
Uniform Federal Accessibility Standard (UFAS)

#	Date	Location	Item	Issue	Recommendation	Applicable Citation*	Status
1.	09-14-2023	**Entrance**	Accessible Route	Accessible Route was not required to unit by HPD/BLDS for project		UFAS § 4.3	Closed
2.	09-14-2023	**Unit 1D**	Entry Door	Door clear opening measures 29.5 inches. 32 inches clear minimum clear width was not required by HPD/BLDS for project		UFAS § 4.13.5	Closed
3.	09-14-2023			Door maneuvering clearance measures 41 inches perpendicular to door. 48 inches minimum maneuvering clearance was not required by HPD/BLDS for project		UFAS § 4.13.6	Closed
4.	09-14-2023			Vertical change in elevation measures 1 inch. Required to be ½ inch maximum beveled 1;2. 	Replace DOOR threshold to provide ½ inch maximum vertical change in elevation beveled 1:2.	A117.1 2009 § 303 UFAS § 4.3.8	Open
5.	09-14-2023	Bathroom	Entry Door	Door maneuvering clearance measures 40 inches perpendicular to door.			

DRAFT

#	Date	Location	Item	Issue	Recommendation	Applicable Citation*	Status
				48 inches minimum maneuvering clearance (depth) was not required by HPD/BLDS for project			
6.	09-14-2023		Hand Shower	Hand shower does not have non-positive shut off feature. Non-positive shut off feature is required on hand showers.	Replace hand shower to provide non-positive shut off.	A117.1 2009 § 607.6	Open
7.	09-14-2023		Grab Bar	Swing Up Grab Bar measures 14 inches from the center line of the water closet to the center line of the Swing Grab Bar. Required to be 15.75 inches.	Reinstall Swing Grab Bar 15.75 inches from the center line of the water closet. 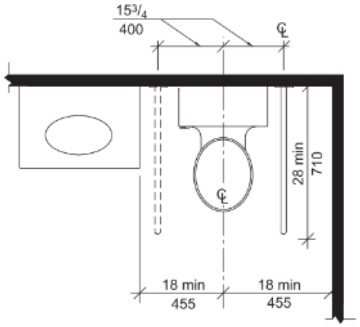	A117.1 2009 § 1004.11.1.1 UFAS § 4.16.4	Open
8.	09-14-2023			The horizontal rear Grab Bar measures 10 inches from the center line of the water closet to the center line of the escutcheon Grab bar. Required to be 12 inches.	Defend installation of 24 inch rear grab bar by applying **1003.11.1, A117.1 - 2009** 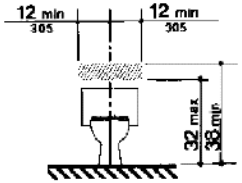	**1003.11.1, A117.1 - 2009** 4. Where the lavatory overlaps the water closet clearance in accordance with the exception to Section 1003.11.2.4.4 reinforcement at the water closet rear wall for a 24-inch (610 mm) minimum length grab bar, centered on the water closet, shall be provided.	Open
9.	09-14-2023		Lavatory	Pipe protection is not provided beneath lavatory. Required to be provided on exposed pipes.	Provide pipe protection beneath lavatory.	A117.1 2009 § 606.6 UFAS § 4.19.4	Open

DRAFT

#	Date	Location	Item	Issue	Recommendation	Applicable Citation*	Status
10.	09-14-2023		Mirror	Bottom edge of reflecting surface of mirror measures 40.25 inches AFF. Required to be 40 inches AFF maximum. 	Permit ¼ inch tolerance	UFAS § 4.19.6	Closed
11.	09-14-2023		Grab Bar	At the back wall of the bathtub, the centerline of escutcheon of back wall grab bars measure >12 inches from control wall. Required to be 12 inches maximum from control end wall. Grab bar is required to be 24 inches minimum in length.	Defend installation of 24 inch rear grab bar by applying **1003.11.1, A117.1 - 2009** 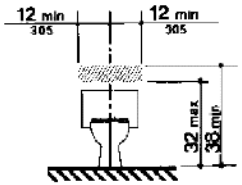	**1003.11.1, A117.1 - 2009** 4. Where the lavatory overlaps the water closet clearance in accordance with the exception to Section 1003.11.2.4.4 reinforcement at the water closet rear wall for a 24-inch (610 mm) minimum length grab bar, centered on the water closet, shall be provided.	Open

DRAFT

#	Date	Location	Item	Issue	Recommendation	Applicable Citation*	Status
12.	09-14-2023		Closets	All closets with >24 inches in depth shall provide at least one door leaf with a 32 inches minimum door passage.	Fur-out closet depth so it does not exceed 24 inches	UFAS § 4.13.5	Open
13.	09-14-2023		Kitchen	At work surface, the existing cabinet interior clearance measures <30 inches. Removable cabinet bracket is not installed. Required base cabinet to be removable with a minimum of 30 inches clear knee space.	Adjust so that when base cabinet is removed, 30 inch minimum wide work surface for forward approach will be available	UFAS § 4.34.6.4	Open

DRAFT

#	Date	Location	Item	Issue	Recommendation	Applicable Citation*	Status
14.	09-14-2023		Sink Cabinet	Pipe protection is not provided beneath sink cabinet. Required to be provided on exposed pipes.	Provide pipe protection beneath lavatory.	A117.1 2009 § 606.6 UFAS § 4.19.4	Open
15.	09-14-2023			The existing cabinet interior clearance measures <30 inches. Required base cabinet to be removable with a minimum of 30 inches clear knee space.	Adjust so that when base cabinet is removed, 30 inch minimum wide work surface for forward approach will be available	UFAS § 4.34.6.5	Open

DRAFT

#	Date	Location	Item	Issue	Recommendation	Applicable Citation*	Status
16.	09-14-2023			The top of the lowest shelf is 48.5 inches. Required to be 48 inches maximum.	Lower wall cabinets so that they are 48 inches maximum AFF	UFAS § 4.34.6.10	Open
17.	09-14-2023	**Unit 1E**	Entry Door	Pull side clearance measures 13 inches. Maneuvering clearance was not required by HPD/BLDS for project	Reduce depth of closet so it will not exceed 24 inches	UFAS § 4.13.6	Closed
18.	09-14-2023			Door clear opening measures 29.5 inches. 32 inches clear minimum clear width was not required by HPD/BLDS for project	Replace door to provide 32 inch clear door opening width.	UFAS § 4.13.5	Closed

DRAFT

#	Date	Location	Item	Issue	Recommendation	Applicable Citation*	Status
19.	09-14-2023			Vertical change in elevation measures 1 inch. Required to be ½ inch maximum beveled 1;2. 	Replace DOOR threshold to provide ½ inch maximum vertical change in elevation beveled 1:2.	A117.1 2009 § 303 UFAS § 4.3.8	Open
20.	09-14-2023		Kitchen	At work surface, the existing cabinet interior clearance measures <30 inches. Removable cabinet bracket is not installed. Required base cabinet to be removable with a minimum of 30 inches clear knee space. 	Adjust so that when base cabinet is removed, 30 inch minimum wide work surface for forward approach will be available	UFAS § 4.34.6.4	Open

DRAFT

#	Date	Location	Item	Issue	Recommendation	Applicable Citation*	Status
21.	09-14-2023				Confirm Oven is self-cleaning	UFAS §4.34.6.7	Open
22.	09-14-2023		Sink Cabinet	Pipe protection is not provided beneath sink cabinet. Required to be provided on exposed pipes.	Provide pipe protection beneath lavatory.	A117.1 2009 § 606.6 UFAS § 4.19.4	Open
23.	09-14-2023			The existing cabinet interior clearance measures <30 inches. Required base cabinet to be removable with a minimum of 30 inches clear knee space.	Adjust so that when base cabinet is removed, 30 inch minimum wide work surface for forward approach will be available	UFAS § 4.34.6.5	Open

DRAFT

#	Date	Location	Item	Issue	Recommendation	Applicable Citation*	Status
24.	09-14-2023			The top of the lowest shelf is 48.5 inches. Required to be 48 inches maximum.	Lower wall cabinets so that they are 48 inches maximum AFF	UFAS § 4.34.6.10	Open
25.	09-14-2023	Bathroom	Hand Shower	Hand shower does not have non-positive shut off feature. Non-positive shut off feature is required on hand showers.	Replace hand shower to provide non-positive shut off.	A117.1 2009 § 607.6	Open

DRAFT

#	Date	Location	Item	Issue	Recommendation	Applicable Citation*	Status
26.	09-14-2023		Lavatory	Pipe protection is not provided beneath lavatory. Required to be provided on exposed pipes.	Provide pipe protection beneath lavatory.	A117.1 2009 § 606.6 UFAS § 4.19.4	Open
27.	09-14-2023						
28.	09-14-2023		Mirror	Bottom edge of reflecting surface of mirror measures 40.25 inches AFF. Required to be 40 inches AFF maximum. 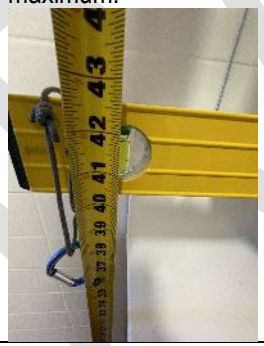	Permit ¼ inch tolerance	UFAS § 4.19.6	Closed
29.	09-14-2023		Grab Bar	At the back wall of the bathtub, the centerline of escutcheon of back wall grab bars measure >12 inches from control wall. Required to be 12 inches maximum from control end wall. Grab bar is required to be 24 inches minimum in length.	Relocate grab bars to provide 12 inches maximum from centerline of escutcheon to control end wall.	A117.1 2009 § 607.4.2.1	Open

DRAFT

#	Date	Location	Item	Issue	Recommendation	Applicable Citation*	Status
30.	09-14-2023			Centerline of the vertical grab bar measures 40 from the centerline to the rear wall. Required to be 30 inches	Relocate vertical wall grab bar to provide centerline of the bar at 30 inches absolute off rear wall.	NYC BC 2014 § P.102.8	Open

End of Report

DRAFT

United Spinal Association's ACCESSIBILITY SERVICES

Kane / Samet
Park City South Phase 2
927 S Saunders Rd
Raleigh, NC

Inspection #	Inspection Date	Inspector	Inspection Description
Inspection 1	8/16/2023	Robert Reed	Rough electrical, plumbing and framing as completed
Inspection 2	11/7/2023	Robert Reed	Rough electrical, plumbing and framing as completed

***Applicable Accessibility Codes & Standards:**
2018 North Carolina Building Code (ANSI A117.1 – 2009 *safe harbor* for compliance with the Federal Fair Housing Act Accessibility Guidelines)

#	Date	Location	Item	Issue	Recommendation	Citation*	Status
Exterior							
1	8/16/2023	**Parking**		Exterior site work not yet completed			
2	8/16/2023	**Accessible Route between Accessible Entrance and Public Street & Sidewalk**		Exterior site work not yet completed			
Interior							
3		**Retail A1**		Not ready for inspection			
4		**Retail A2**		Not ready for inspection			
5		**Retail**		Not ready for inspection			
6		**Retail**		Not ready for inspection			
7		**Flex A**		Not ready for inspection			
8		**Flex B**		Not ready for inspection			
9		**Flex C**		Not ready for inspection			
Clubhouse – Amenities							
10		**2nd Floor Terrace**		Not ready for inspection			
11	8/16/2023	**7th Floor**		Not ready for inspection			

#	Date	Location	Item	Issue	Recommendation	Citation*	Status
		Amenity					
12		**7th Floor Exterior Terrace**		Not ready for inspection			
13	8/16/2023	**Club**		Not ready for inspection			
14	8/16/2023	**Leasing**		Not ready for inspection			
15	8/16/2023	**Mail / Package**		Not ready for inspection			
16	8/16/2023	**Fitness**		Not ready for inspection			
17	8/16/2023	**Residential Lobby**		Not ready for inspection			
18	8/16/2023	**Pool**		Not ready for inspection			
19	8/16/2023	**Pool Toilet Rooms**		Not ready for inspection			
20	8/16/2023	**Zen room**		Not ready for inspection			
21	8/16/2023	**Sauna**		Not ready for inspection			
22	8/16/2023	**Spa**		Not ready for inspection			
23	8/16/2023	**Co-working**		Not ready for inspection			
24	8/16/2023	**Retail**		Not ready for inspection			
25		**Bike Storage**		Not ready for inspection			
26	8/16/2023	**Model**		Not ready for inspection			
Spa Toilet Room – Men's							
27				Not ready for inspection			
Spa Toilet Room – Women's							
28				Not ready for inspection			
Public Toilet Room – Men's Fitness							
29				Not ready for inspection			
Gang toilet room – Women's Fitness							
30				Not ready for inspection			
Lobby / Office Toilet Room							
31				Not ready for inspection			

#	Date	Location	Item	Issue	Recommendation	Citation*	Status
Section A							
Type A Units							
32	11/7/2023	**315 A3-A**	Pantry End Wall	The end wall adjacent to the Pantry is 25 ¾ inches deep, which will not allow 25 ½ inch maximum reach depth for adjacent receptacle due to depth of Range	*Shorten* end wall so side reach will run off end of countertop length	A117.1 § 308.3.2	Open
33	11/7/2023		Patio Door Threshold	The patio deck to bottom of door threshold is ¾ inch and will not allow maximum door threshold height to deck of ½ inch.	Float concrete	A117.1 § 303.2	Open
34	11/7/2023		Kitchen	Due to appliance depth, there are Two (2) receptacles in a corner where only One (1) is exempt	Relocate corner receptacle by Sink / Refrigerator to the left side of the triple stud	A117.1 § 1003.9 exc. 2	Open
35	11/7/2023		Parallel (Side) Wall grab Bar Reinforcement	Parallel (Side) Wall grab bar blocking in the Type A Bathroom is short 1 stud space	Add to more stud space blocking	A117.1 § 609.8	Open

#	Date	Location	Item	Issue	Recommendation	Citation*	Status
				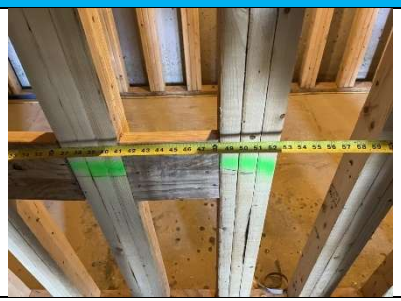			
36	11/7/2023	**316** **S2 - A**	Appliance Location	The microwave is planned on being located at the left of the sink at countertop edge which will leave a noncompliant receptacle immediately to the right of the Range	Place the microwave circuit immediately to the right of the Range	A117.1 § 1003.9 (1)	Open
37	11/7/2023		Water Closet Location	The water closet stub is at 15 ½ inches centerline to closest framed wall and will not allow finished dimension of 16 – 18 inches centerline as required 	Relocate stub to between 16 5/8 and 18 5/8 inches from closest framed wall	A117.1 § 1003.11.2.4	Open
38	11/7/2023		Lavatory Receptacle	The lavatory receptacle is located on the rear wall, not the side wall within 10 inches of the lavatory front 	Relocate the receptacle to lavatory side wall	A117.1 § 1003.9 (1)	Open
39		**A1.1+-A**		Not ready for inspection			
40		**A3.1-A**		Not ready for inspection			
41		**B10-A**		Not ready for inspection			
42		**C1.1-A**		Not ready for inspection			

#	Date	Location	Item	Issue	Recommendation	Citation*	Status
Type B units							
43	11/7/2023	**All**	**Showers**	48 inch minimum clear floor space required from shower control wall	Install base unit of shower (shower pan) 5/8 inch in front of perpendicular framing to allow 5/8 sheetrock to butt flush to shower pan 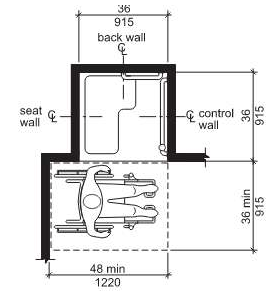	A117.1 § 1004.11.3.1.3.3	Open
44	8/16/2023	**363** **S1**		No Issues at this time			
45		**S1.1**		Not ready for inspection			
46		**S1A**		Not ready for inspection			
47	11/7/2023	**303** **S1B**	**Kitchen**	Due to appliance depth, there are two (2) receptacles right of the Range that may exceed 25 ½ inch side reach, where only one (1) is exempt	Install a 2 inch extension box to the receptacle right of the Range from 5% attic stock upon request	A117.1 § 1004.9	Open
48	11/7/2023	**314** **S1C**	**Kitchen**	Due to appliance depth, the receptacle to the right of the appliance will be > 25 ½ inches	Install an additional receptacle mid counter on the right side wall	A117.1 § 1004.9	Open
49		**S2**		Not ready for inspection			
50	11/7/2023	**323** **S3**	**Kitchen**	Due to appliance depth, there are two (2) receptacles right of the refrigerator that may exceed 25 ½ inch side reach, where only one (1) is exempt. Refrigerator pocket is 7 ¼ inch deep not 8 inches as other units	Install a 2 inch extension box to the receptacle right of the Range	A117.1 § 1004.9	Open
51		**S3.1**		Not ready for inspection			
52	8/16/2023	**365** **S4**		Reach to outlet between Range and Refrigerator exceeds 25 ½ inches maximum reach required due to appliance depth	Relocate outlet on sidewall 10 inches maximum from face of Range	A117.1 § 1004.9	Open
53	8/16/2023			Reach to outlet between Range and Refrigerator exceeds 25 ½ inches maximum reach required due to appliance depth	Option 1: Build out backsplash or rear wall, or Option 2: Use extension boxes to achieve maximum reach depth allowed	A117.1 § 1004.9	Open
54		**S4.1**		Not ready for inspection			
55	11/7/2023	**317** **S5**	**Kitchen**	Due to appliance depth, there are two (2) receptacles left of the range that may exceed 25 ½ inch side reach, where only one (1) is exempt	Install a 2 inch extension box to the receptacle right of the Range	A117.1 § 1004.9	Open
56		**S5.1**		Not ready for inspection			

#	Date	Location	Item	Issue	Recommendation	Citation*	Status
57		**A1**		Not ready for inspection			
58	8/16/2023	**370** **A1+**	Kitchen	There are (2) receptacles in a corner condition exceeding 25 ½ inch side reach, where only one (1) is exempt 	Relocate receptacle left of the range 1 stud space towards the range	A117.1 § 1004.9	Open
59		**A1.1+**					
60	11/7/2023	**321** **A2+**	**Kitchen**	Due to appliance depth, there are (2) receptacles right of the Range that may exceed 25 ½ inch side reach, where only one (1) is exempt	Install a 2 inch extension box to the receptacle right of the Range	A117.1 § 1004.9	Open
61		**A2.1+**		Not ready for inspection			
62	11/7/2023	**301** **A3+**	**Kitchen**	There are (2) receptacles in a corner condition exceeding 25 ½ inch side reach, where only (one) 1 is exempt	Relocate to receptacle right of the Range 1 stud space toward the corner, and eliminate the corner receptacle on the refrigerator wall 	A117.1 § 1004.9	Open
63	11/7/2023	**309** **A1A**	**Kitchen**	Due to appliance depth, there are (2) receptacles right of the Range that may exceed 25 ½ inch side reach, where only one (1) is exempt	Install a 2 inch extension box to the receptacle right of the Range	A117.1 § 1004.9	Open
64	8/16/2023	**371** **A1B**	**Kitchen**	There are (2) receptacles in a corner condition exceeding 25 ½ inch side reach, where only 1 is exempt	Relocate to the receptacle left of the range toward the corner, and eliminate the corner receptacle on the range wall	A117.1 § 1004.9	Open

#	Date	Location	Item	Issue	Recommendation	Citation*	Status
					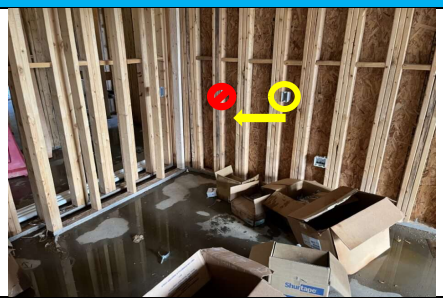		
65		**A1.1B**		Not ready for inspection			
66		**A1C**		Not ready for inspection			
67		**A1D**		Not ready for inspection			
68		**A1E**		Not ready for inspection			
69	11/7/2023	**733 A1F**	**Kitchen**	Due to appliance depth, there are two (2) receptacles right of the Range that may exceed 25 ½ inch side reach, where only one (1) is exempt	Install a 2 inch extension box to the receptacle right of the Range	A117.1 § 1004.9	Open
70		**A1.1F**		Not ready for inspection			
71		**A1G**		Not ready for inspection			
72	11/7/2023	**307 A2**	**Kitchen**	Due to appliance depth, there are two (2) receptacles right of the Range that may exceed 25 ½ inch side reach, where only one (1) is exempt	Install a 2 inch extension box to the receptacle right of the Range	A117.1 § 1004.9	Open
73	11/7/2023		**Water closet stub option B bathroom**	Water closet stub is 20 ½ inches from closest parallel (side) wall framed wall, will not allow finished dimension of 16 – 18 inches centerline from closest wall. 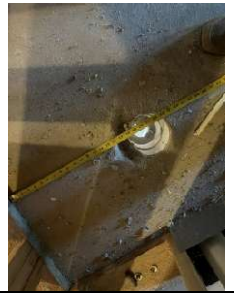	Relocate stub to 18 5/8 inches from closest framed wall to centerline of water closet	A117.1 § 1004.11.1.1	Open
74		**A2B**		Not ready for inspection			
75		**A3**		Not ready for inspection			
76		**A3.1**		Not ready for inspection			

#	Date	Location	Item	Issue	Recommendation	Citation*	Status
77	8/16/2023	**368** **A4**	Kitchen	Reach to outlet between Range and Refrigerator exceeds 25 ½ inches maximum reach required due to appliance depth	Option 1: Build out backsplash or rear wall, or Option 2: Use extension boxes to achieve maximum reach depth allowed	A117.1 § 1004.9	Open
78		**A4.1**		Not ready for inspection			
79	11/7/2023	**318** **A5**	**Kitchen**	Due to appliance depth, there are two (2) receptacles right of the Range that may exceed 25 ½ inch side reach, where only one (1) is exempt		A117.1 § 1004.9	Open
80		**A5.1**		Not ready for inspection			
81	11/7/2023	**327** **A6**	**Kitchen**	Due to appliance depth, there are two (2) receptacles right of the Range that may exceed 25 ½ inch side reach, where only one (1) is exempt	Install a 2 inch extension box to the receptacle right of the Range	A117.1 § 1004.9	Open
82		**A6.1**		Not ready for inspection			
83	11/7/2023	**325** **A7**	**Kitchen**	The end wall adjacent to the Pantry is 25 ¾ inches deep, which will not allow 25 ½ inch maximum reach depth for adjacent receptacle due to depth of Range 	*Shorten* end wall to 25 ½ inches, side reach 48 in box will extend past end of wall	A117.1 § 1004.9	Open
84		**A7.1**		Not ready for inspection			
85		**B1**		Not ready for inspection			
86	11/7/2023	**306** **B2**		No issues at this time			
87	11/7/2023	**302** **B3**	**Kitchen**	Due to appliance depth, there are two (2) receptacles right of the Range that may exceed 25 ½ inch side reach, where only one (1) is exempt	Install a 2 inch extension box to the receptacle right of the Range	A117.1 § 1004.9	Open
88	11/7/2023	**300** **B4**	**Water closet stub option B bathroom**	Water closet stub as positioned will not allow finished dimension of 16 – 18 inches centerline from finished parallel (side) wall.	Position stub at closest edge of core hole to framed wall when grouted in place so that 16 – 18 inches to centerline of water closet can be achieved	A117.1 § 1004.11.1.1	Open

#	Date	Location	Item	Issue	Recommendation	Citation*	Status
				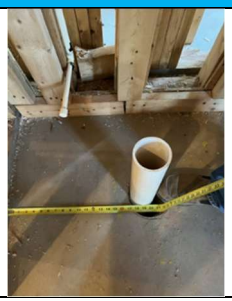			
89	11/7/2023		**Kitchen**	Due to appliance depth, there are (2) receptacles right of the Range that may exceed 25 ½ inch side reach, where only one (1) is exempt	Install a 2 inch extension box to the receptacle right of the Range	A117.1 § 1004.9	Open
90		**B5**		Not ready for inspection			
91	11/7/2023	**311** **B6**	**Kitchen**	Due to appliance depth, there are (2) receptacles right of the Range that may exceed 25 ½ inch side reach, where only 1 is exempt	Install a 2 inch extension box to the receptacle right of the Range from 5% attic stock upon request	A117.1 § 1004.9	Open
92	8/16/2023	**361** **B7**	Kitchen	Reach to outlet between Range and Refrigerator exceeds 25 ½ inches maximum reach required due to appliance depth	Option 1: Build out backsplash or rear wall, or Option 2: Use extension boxes to achieve maximum reach depth allowed	A117.1 § 1004.9	Open
93		**B7.2**		Not ready for inspection			
94	11/7/2023	**329** **B8**	**Shower**	48 inch minimum clear floor space required from shower control wall	Install base unit of shower (shower pan) 5/8 inch in front of perpendicular framing to allow 5/8 sheetrock to butt flush to shower pan 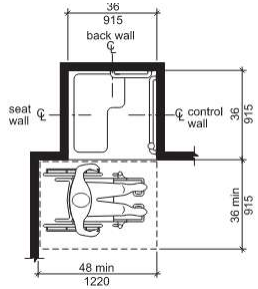	A117.1 § 1004.11.3.1.3.3	Open
95		**B8.1**		Not ready for inspection			
96	8/16/2023	**372** **B9**	**Bath**	The centerline of the water closet drains is at 19 inches from closest framed wall, not 18 inches finished as required to allow future drop down grab bar	Relocate the drain so finished dimension to closest wall will be 18 inches	A117.1 § 1004.11.1.1	Open

#	Date	Location	Item	Issue	Recommendation	Citation*	Status
					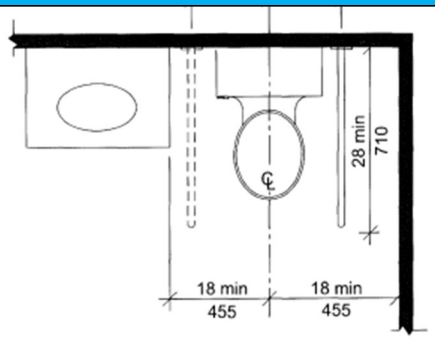		
97	8/16/2023		**Kitchen**	The obstructed side reach for electrical outlets exceeds 25 1/2 inches due to appliance depth	Add a receptacle to the left side wall mid counter depth by range	A117.1 § 1004.9	Open
98		**B9.1**		Not ready for inspection			
99	11/7/2023	**754** **B10**	**Kitchen**	Due to appliance depth, there is a receptacle between the Range and Refrigerator that will exceed 25 ½ inch maximum reach permitted	Install a 2 inch extension box to the receptacle	A117.1 § 1004.9	Open
100	11/7/2023	**750** **B11**	**Kitchen**	Due to appliance depth, the receptacles right of the Range will exceed 25 ½ inch side reach	Install a receptacle to the wall right of the Range mid counter depth	A117.1 § 1004.9 (2)	Open
101	11/7/2023	**752** **B12**	**Kitchen**	Due to appliance depth, the receptacles right of the Range will exceed 25 ½ inch side reach	Install an additional receptacle mid counter on the right side wall	A117.1 § 1004.9 (2)	Open
102	11/7/2023		**Kitchen**	Due to appliance depth, there are (2) receptacles left of the range that may exceed 25 ½ inch side reach, where only 1 is exempt	Install a 2 inch extension box to the receptacle left of the range from 5% attic stock upon request	A117.1 § 1004.9	Open
103	8/16/2023	**373** **C1**	**Bath**	The centerline of the water closet drain is at 19 1/2 inches from closest parallel (side) wall.	Relocate the drain so that 16 – 18 inches to centerline of water closet can be achieved	A117.1 § 1004.11.1.1	Open
014		**C1.1**		Not ready for inspection			
105		**TH1**		Not ready for inspection			
106		**TH2**		Not ready for inspection			
107		**TH3**		Not ready for inspection			
108		**TH4**		Not ready for inspection			

End of Report

United Spinal Association's ACCESSIBILITY SERVICES

H.E.L.P. Cluster Rehab – Curtis + Ginsberg
1233 White Plains Road
Bronx NY, 10472
UFAS Accessibility Compliance
Unit 1D
Unit 1E

Applicable Accessibility Code & Standard*
Uniform Federal Accessibility Standard (UFAS)

#	Date	Location	Item	Issue	Recommendation	Applicable Citation*	Status
1.	09-14-2023	**Entrance**	Accessible Route	Accessible Route was not required to unit by HPD/BLDS for project		UFAS § 4.3	Closed
2.	09-14-2023	**Unit 1D**	Entry Door	Door clear opening measures 29.5 inches. 32 inches clear minimum clear width was not required by HPD/BLDS for project		UFAS § 4.13.5	Closed
3.	09-14-2023			Door maneuvering clearance measures 41 inches perpendicular to door. 48 inches minimum maneuvering clearance was not required by HPD/BLDS for project		UFAS § 4.13.6	Closed
4.	09-14-2023			Vertical change in elevation measures 1 inch. Required to be ½ inch maximum beveled 1;2. 	Replace DOOR threshold to provide ½ inch maximum vertical change in elevation beveled 1:2.	A117.1 2009 § 303 UFAS § 4.3.8	Open

DRAFT

#	Date	Location	Item	Issue	Recommendation	Applicable Citation*	Status
5.	09-14-2023	Bathroom	Entry Door	Door maneuvering clearance measures 40 inches perpendicular to door. 48 inches minimum maneuvering clearance (depth) was not required by HPD/BLDS for project			
6.	09-14-2023		Hand Shower	Hand shower does not have non-positive shut off feature. Non-positive shut off feature is required on hand showers.	Replace hand shower to provide non-positive shut off.	A117.1 2009 § 607.6	Open
7.	09-14-2023		Grab Bar	Swing Up Grab Bar measures 14 inches from the center line of the water closet to the center line of the Swing Grab Bar. Required to be 15.75 inches. 	Reinstall Swing Grab Bar 15.75 inches from the center line of the water closet. 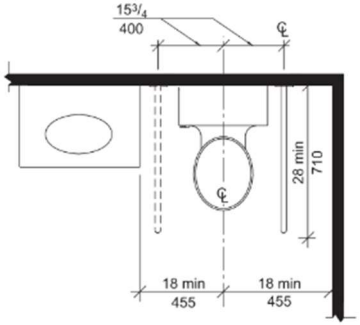	A117.1 2009 § 1004.11.1.1 UFAS § 4.16.4	Open
8.	09-14-2023			The horizontal rear Grab Bar measures 10 inches from the center line of the water closet to the center line of the escutcheon Grab bar. Required to be 12 inches. 	Defend installation of 24 inch rear grab bar by applying **1003.11.1, A117.1 - 2009** 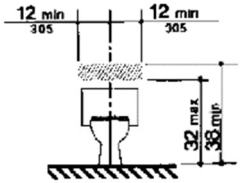	**1003.11.1, A117.1 - 2009** 4. Where the lavatory overlaps the water closet clearance in accordance with the exception to Section 1003.11.2.4.4 reinforcement at the water closet rear wall for a 24-inch (610 mm) minimum length grab bar, centered on the water closet, shall be provided.	Open

DRAFT

#	Date	Location	Item	Issue	Recommendation	Applicable Citation*	Status
9.	09-14-2023		Lavatory	Pipe protection is not provided beneath lavatory. Required to be provided on exposed pipes.	Provide pipe protection beneath lavatory.	A117.1 2009 § 606.6 UFAS § 4.19.4	Open
10.	09-14-2023		Mirror	Bottom edge of reflecting surface of mirror measures 40.25 inches AFF. Required to be 40 inches AFF maximum.	Permit ¼ inch tolerance	UFAS § 4.19.6	Closed
11.	09-14-2023		Grab Bar	At the back wall of the bathtub, the centerline of escutcheon of back wall grab bars measure >12 inches from control wall. Required to be 12 inches maximum from control end wall. Grab bar is required to be 24 inches minimum in length.	Defend installation of 24 inch rear grab bar by applying **1003.11.1, A117.1 - 2009** 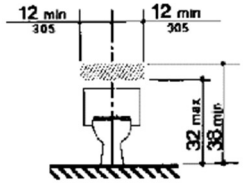	**1003.11.1, A117.1 - 2009** 4. Where the lavatory overlaps the water closet clearance in accordance with the exception to Section 1003.11.2.4.4 reinforcement at the water closet rear wall for a 24-inch (610 mm) minimum length grab bar, centered on	Open

DRAFT

#	Date	Location	Item	Issue	Recommendation	Applicable Citation*	Status
						the water closet, shall be provided.	
12.	09-14-2023		Closets	All closets with >24 inches in depth shall provide at least one door leaf with a 32 inches minimum door passage.	Fur-out closet depth so it does not exceed 24 inches	UFAS § 4.13.5	Open
13.	09-14-2023		Kitchen	At work surface, the existing cabinet interior clearance measures <30 inches. Removable cabinet bracket is not installed. Required base cabinet to be removable with a minimum of 30 inches clear knee space.	Adjust so that when base cabinet is removed, 30 inch minimum wide work surface for forward approach will be available	UFAS § 4.34.6.4	Open

DRAFT

#	Date	Location	Item	Issue	Recommendation	Applicable Citation*	Status
14.	09-14-2023		Sink Cabinet	Pipe protection is not provided beneath sink cabinet. Required to be provided on exposed pipes.	Provide pipe protection beneath lavatory.	A117.1 2009 § 606.6 UFAS § 4.19.4	Open
15.	09-14-2023			The existing cabinet interior clearance measures <30 inches. Required base cabinet to be removable with a minimum of 30 inches clear knee space.	Adjust so that when base cabinet is removed, 30 inch minimum wide work surface for forward approach will be available	UFAS § 4.34.6.5	Open

DRAFT

#	Date	Location	Item	Issue	Recommendation	Applicable Citation*	Status
16.	09-14-2023			The top of the lowest shelf is 48.5 inches. Required to be 48 inches maximum.	Lower wall cabinets so that they are 48 inches maximum AFF	UFAS § 4.34.6.10	Open
17.	09-14-2023	**Unit 1E**	Entry Door	Pull side clearance measures 13 inches. Maneuvering clearance was not required by HPD/BLDS for project	Reduce depth of closet so it will not exceed 24 inches	UFAS § 4.13.6	Closed
18.	09-14-2023			Door clear opening measures 29.5 inches. 32 inches clear minimum clear width was not required by HPD/BLDS for project	Replace door to provide 32 inch clear door opening width.	UFAS § 4.13.5	Closed

DRAFT

#	Date	Location	Item	Issue	Recommendation	Applicable Citation*	Status
19.	09-14-2023			Vertical change in elevation measures 1 inch. Required to be ½ inch maximum beveled 1;2. 	Replace DOOR threshold to provide ½ inch maximum vertical change in elevation beveled 1:2.	A117.1 2009 § 303 UFAS § 4.3.8	Open
20.	09-14-2023		Kitchen	At work surface, the existing cabinet interior clearance measures <30 inches. Removable cabinet bracket is not installed. Required base cabinet to be removable with a minimum of 30 inches clear knee space. 	Adjust so that when base cabinet is removed, 30 inch minimum wide work surface for forward approach will be available	UFAS § 4.34.6.4	Open

DRAFT

#	Date	Location	Item	Issue	Recommendation	Applicable Citation*	Status
21.	09-14-2023				Confirm Oven is self-cleaning	UFAS §4.34.6.7	Open
22.	09-14-2023		Sink Cabinet	Pipe protection is not provided beneath sink cabinet. Required to be provided on exposed pipes.	Provide pipe protection beneath lavatory.	A117.1 2009 § 606.6 UFAS § 4.19.4	Open
23.	09-14-2023			The existing cabinet interior clearance measures <30 inches. Required base cabinet to be removable with a minimum of 30 inches clear knee space.	Adjust so that when base cabinet is removed, 30 inch minimum wide work surface for forward approach will be available	UFAS § 4.34.6.5	Open

DRAFT

#	Date	Location	Item	Issue	Recommendation	Applicable Citation*	Status
24.	09-14-2023			The top of the lowest shelf is 48.5 inches. Required to be 48 inches maximum.	Lower wall cabinets so that they are 48 inches maximum AFF	UFAS § 4.34.6.10	Open
25.	09-14-2023	Bathroom	Hand Shower	Hand shower does not have non-positive shut off feature. Non-positive shut off feature is required on hand showers.	Replace hand shower to provide non-positive shut off.	A117.1 2009 § 607.6	Open

DRAFT

#	Date	Location	Item	Issue	Recommendation	Applicable Citation*	Status
26.	09-14-2023		Lavatory	Pipe protection is not provided beneath lavatory. Required to be provided on exposed pipes.	Provide pipe protection beneath lavatory.	A117.1 2009 § 606.6 UFAS § 4.19.4	Open
27.	09-14-2023						
28.	09-14-2023		Mirror	Bottom edge of reflecting surface of mirror measures 40.25 inches AFF. Required to be 40 inches AFF maximum.	Permit ¼ inch tolerance	UFAS § 4.19.6	Closed
29.	09-14-2023		Grab Bar	At the back wall of the bathtub, the centerline of escutcheon of back wall grab bars measure >12 inches from control wall. Required to be 12 inches maximum from control end wall. Grab bar is required to be 24 inches minimum in length.	Relocate grab bars to provide 12 inches maximum from centerline of escutcheon to control end wall.	A117.1 2009 § 607.4.2.1	Open

DRAFT

#	Date	Location	Item	Issue	Recommendation	Applicable Citation*	Status
30.	09-14-2023			Centerline of the vertical grab bar measures 40 from the centerline to the rear wall. Required to be 30 inches	Relocate vertical wall grab bar to provide centerline of the bar at 30 inches absolute off rear wall.	NYC BC 2014 § P.102.8	Open

End of Report

DRAFT